EDA0050-0075
ESA0050-0075

TECHNICAL DATA

DIMENSIONS TO
ISO 5211 - DIN 3337
AND NAMUR VDI / VDE 3845

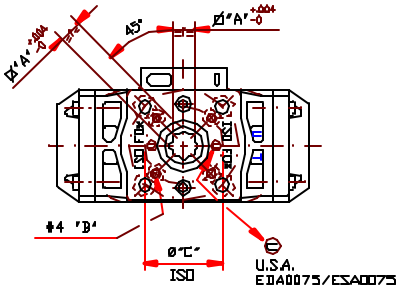

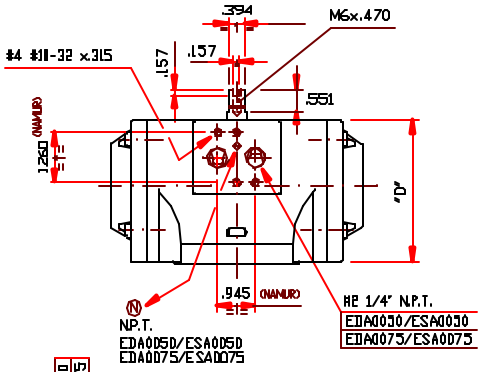

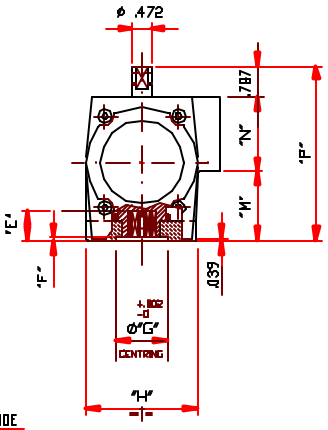

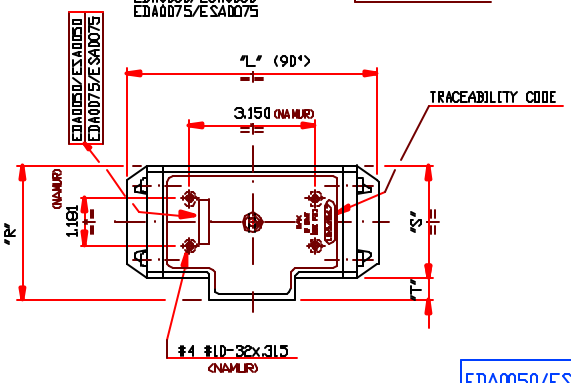

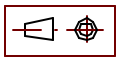

DIMENSIONS IN INCHES

STANDARD TEMPERATURE -4°F + 184°F

	WEIGHT IN L.B.		AIR CONSUMPTION IN CU. IN.	
	D.A.	S.R.	D.A.	S.R.
EDA0050/ESA0050	1.257	1.444 (3+3)	13.7	8.1 (3+3)
EDA0075/ESA0075	2.624	3.064 (6+6)	22.5	10.6 (6+6)

	Ø"A"	"B"	Ø"C"	"D"	"E"	"F"	Ø"G"	"H"	"L"	"M"	"N"	"P"	"R"	"S"	"T"
EDA0050/ESA0050	Ø.433-ISO F04	#10-32x.400 UNF-ISO F04	Ø1.654 ISO F04	2.756	.492	.059	Ø.866	2.087	4.685	1.024	1.772	3.583	2.638	2.126	.512
EDA0075/ESA0075	Ø.551-ISO F05	#1/4"-20x.512 UNC-ISO F05	Ø1.969 ISO F05	3.543	.748	.079	Ø1.299	2.756	6.496	1.732	1.850	4.370	3.386	2.815	.571

Elite Valve Canada

Tel: (519)-3328809

REV	REVISION NOTE	DRAWN	CHK	APP	DATE (DD/MM/YR)	PROJECT NO.		DATE (DD/MM/YR)	CLIENT			
						DRAWN BY	CW	10/12/04	DRAWING TITLE	EDA & ESA 0050-0075		
						CHECKED BY	JW					
						APPROVED BY	JW		PLOT SCALE	DWG SCALE	EDA & ESA 0050-0075	REV
1	ISSUED FOR REVIEW	CW	JW	JW	10/12/04	PROJ. ENGR			N.T.S.	N.T.S.		1