REVISIONS			
REV.	DESCRIPTION	DATE	APPROVED

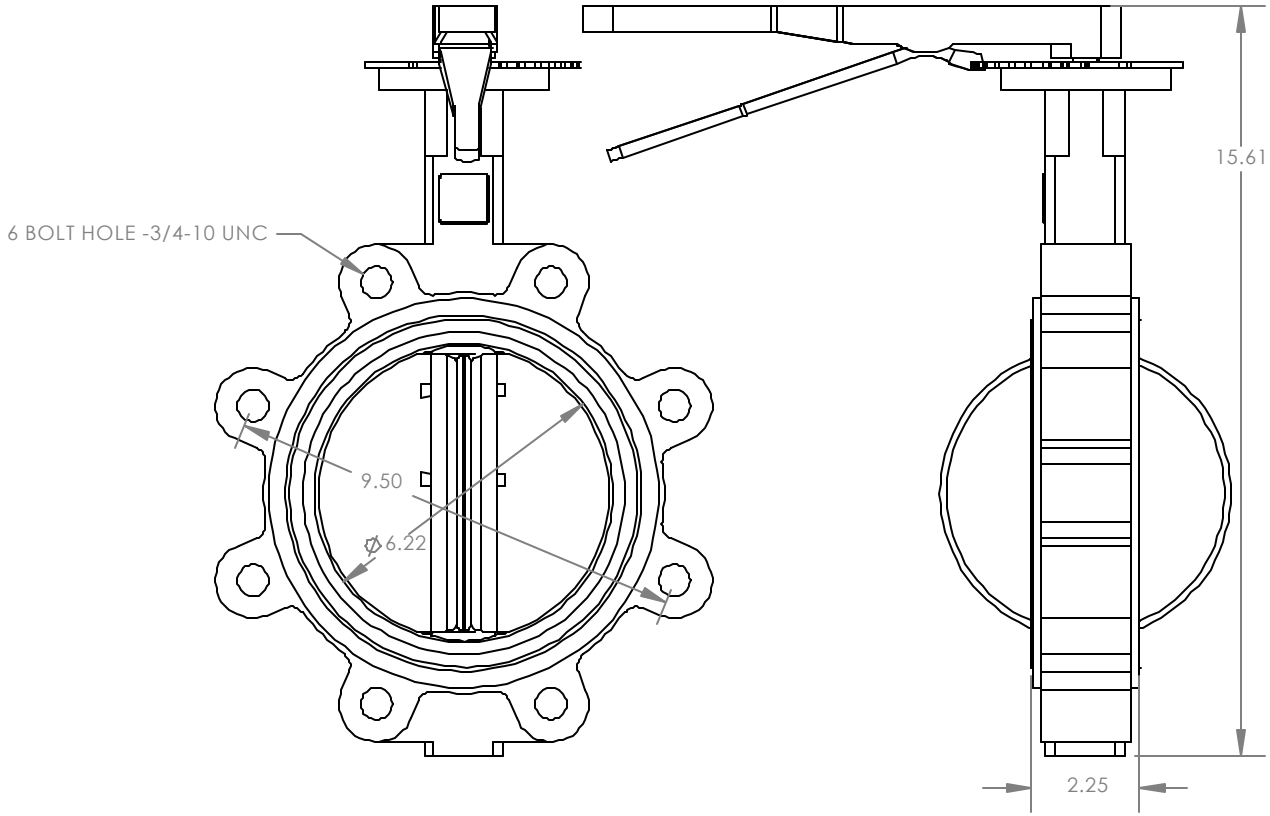

PROPRIETARY AND CONFIDENTIAL
THE INFORMATION CONTAINED IN THIS DRAWING IS THE SOLE PROPERTY OF ELITE VALVE CANADA. ANY REPRODUCTION IN PART OR AS A WHOLE WITHOUT THE WRITTEN PERMISSION OF ELITE VALVE CANADA IS PROHIBITED.

	NAME	DATE
DRAWN	JBW	JUNE 11, 2011
CHECKED		

DESCRIPTION: E8500 6" BUTTERFLY VALVE

DWG. NO. A4211116

MATERIAL: DI BODY, 316SS DISC | WEIGHT: # | SHEET 1 OF 1 | SCALE:1:8

CUSTOMER: | SUPPLIER: | REV: A1

Elite Valve Canada
775 Roper Street | Sarnia, Ontario, Canada | N7S 5G7 | Phone: 519-332-8809 | Fax: 519-337-7933 | Website: www.elitevalve.com | E-mail: sales@elitevalve.com